Aunthentic Repaint

By Mario Solorzano

CITYCRAFT™
PAPERMODELS

Nepal Airlines



AIRBUS A320-233

Nepal Airlines Airbus A320

231

Nepal Airlines Corporation (Nepali: नेपाल वायुसेवा निगम, romanized: Nepāl Vāyusevā Nigam, lit. 'Nepal Air Service Corporation'), formerly known as Royal Nepal Airlines (शाही नेपाल वायुसेवा, Śāhī Nepāl Vāyusevā, 'Royal Nepal Air Service'), is the flag carrier of Nepal. Founded in 1958, it is the oldest airline of the country. Out of its main base at Tribhuvan International Airport, Kathmandu, the airline operates domestic services within Nepal and medium-haul services in Asia. The airline's first aircraft was a Douglas DC-3, used to serve domestic routes and a handful of destinations in India. The airline acquired its first jet aircraft, Boeing 727s, in 1972.

In 2009, at the Dubai Airshow, Nepal Airlines signed a memorandum of understanding to acquire two Airbus A320-200 aircraft with the plans to operate flights to the Middle East and Southeast Asia.

The Airbus A320 family is a series of narrow-body airliners developed and produced by Airbus. The A320 was launched in March 1984, first flew on 22 February 1987, and was introduced in April 1988 by Air France. The first member of the family was followed by the stretched A321 (first delivered in January 1994), the shorter A319 (April 1996), and the even shorter A318 (July 2003).

The A320 series has two variants, the A320-100 and A320-200. Only 21 A320-100s were produced. These aircraft, the first to be manufactured, were delivered to Air Inter – later acquired by Air France – and British Airways as a result of an order from British Caledonian made prior to its acquisition. The primary differences from the -100 were the -200's wingtip fences and increased fuel capacity, providing increased range.





Scale: 1:100
Length: (375mm)
Width: (358mm)
Parts: 304 (12 pages)

This model has been designed in 2 styles.
On the ground (with wheels)
In Flight style (without wheels)
Is nesessary assemble the stand for the "in flight style*

*This model is Designed for Papercraft and is different in several ways from the Real Life Plane.
*Build the model by carefully watching the Assembly Instructions Video.
*Make sure you have the correct printer settings before printing.
It is recommended to use Adobe Acrobat Reader to print models at 100% scale option.

© 2024 CityCraft

Airbus A320-233 | Nepal Airlines 9N-AKX

CITYCRAFT™ PAPERMODELS

Aunthentic Repaint

By Mario Solorzano

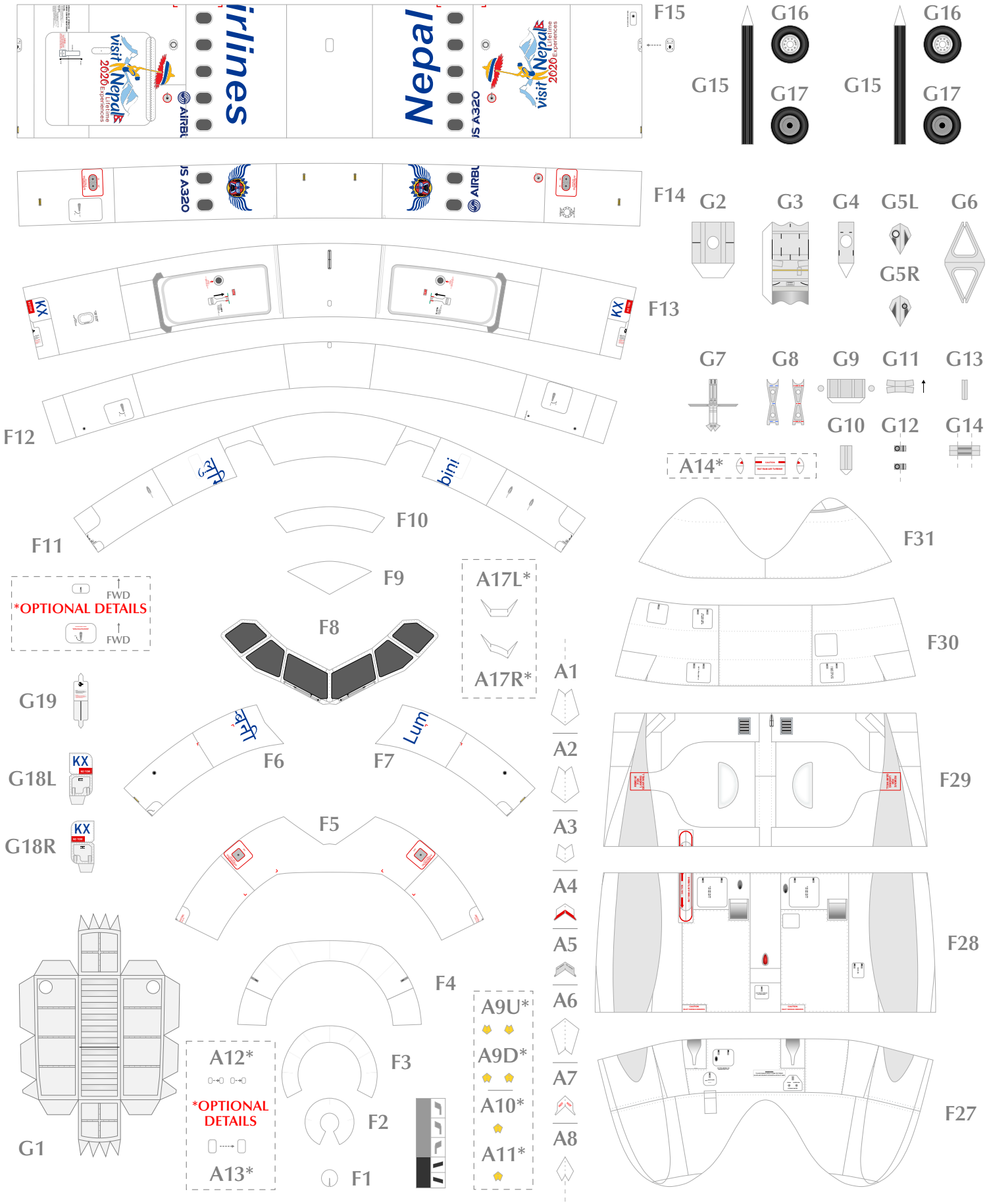

© 2024 CityCraft

Scale 1:100

Airbus A320-233 | Nepal Airlines 9N-AKX

CITYCRAFT™ PAPERMODELS

Aunthentic Repaint

By Mario Solorzano

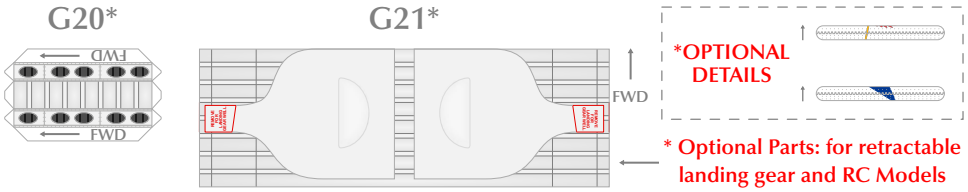

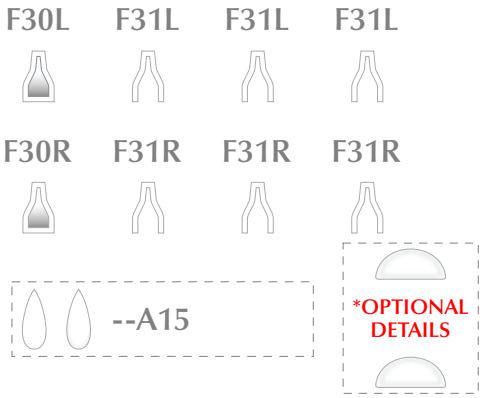

AIRBUS A321

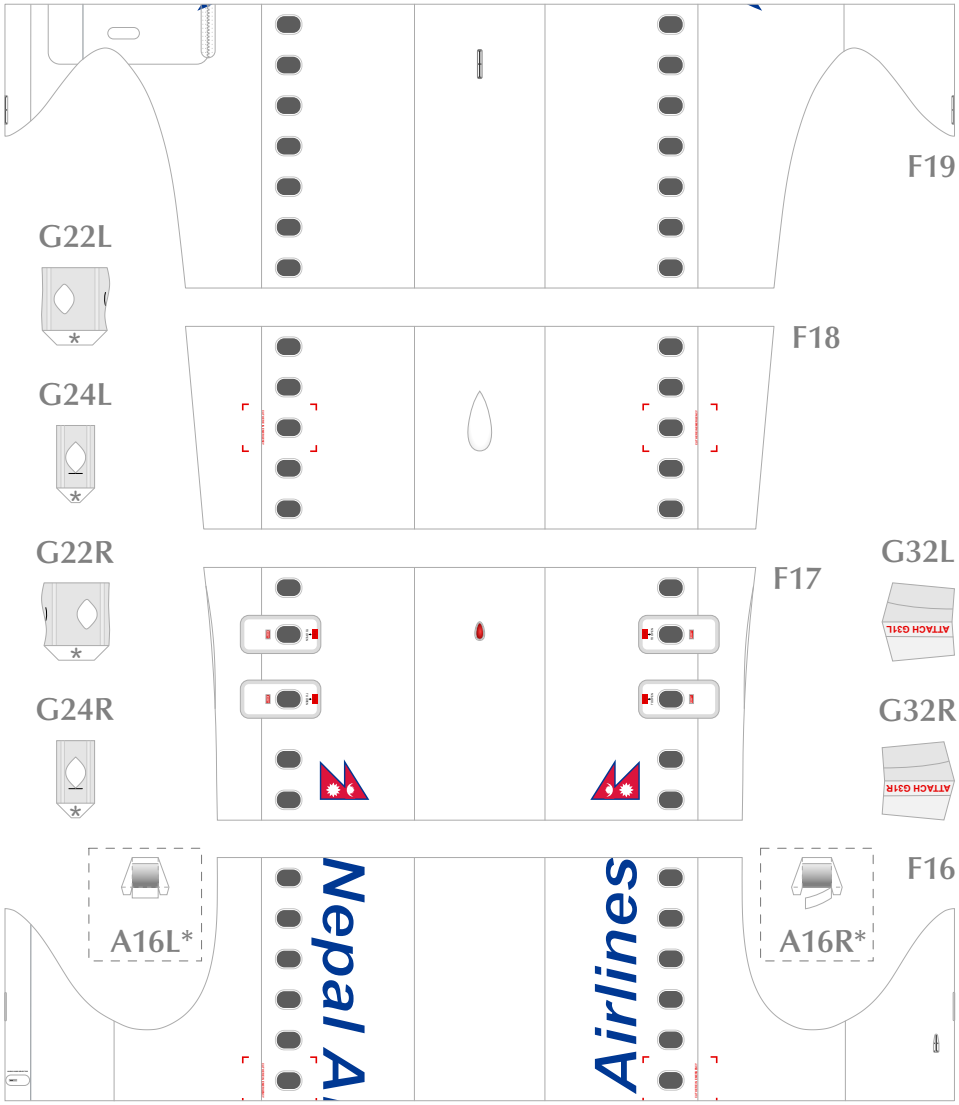

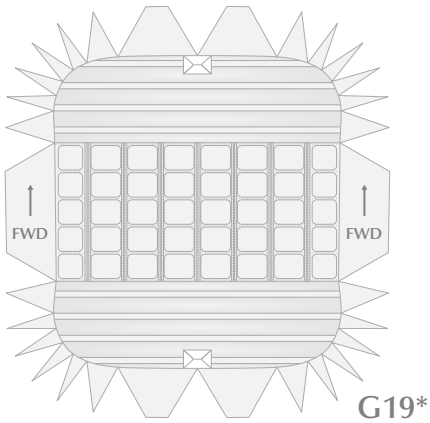

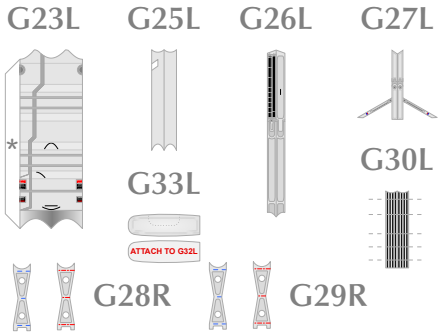

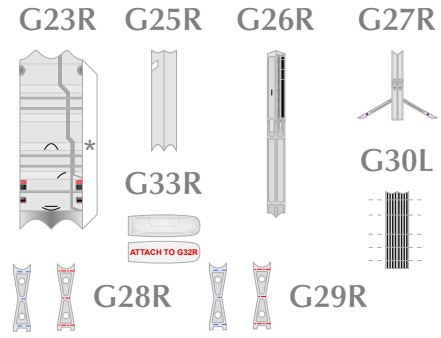

AIRBUS A321

(F15e) IS AVAILABLE ONLY IN THE A321 SERIES

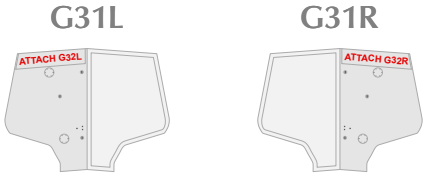

AIRBUS A321

© 2024 CityCraft

Scale 1:100

Airbus A320-233 | Nepal Airlines 9N-AKX

CITYCRAFT™ PAPERMODELS

Aunthentic Repaint

By Mario Solorzano

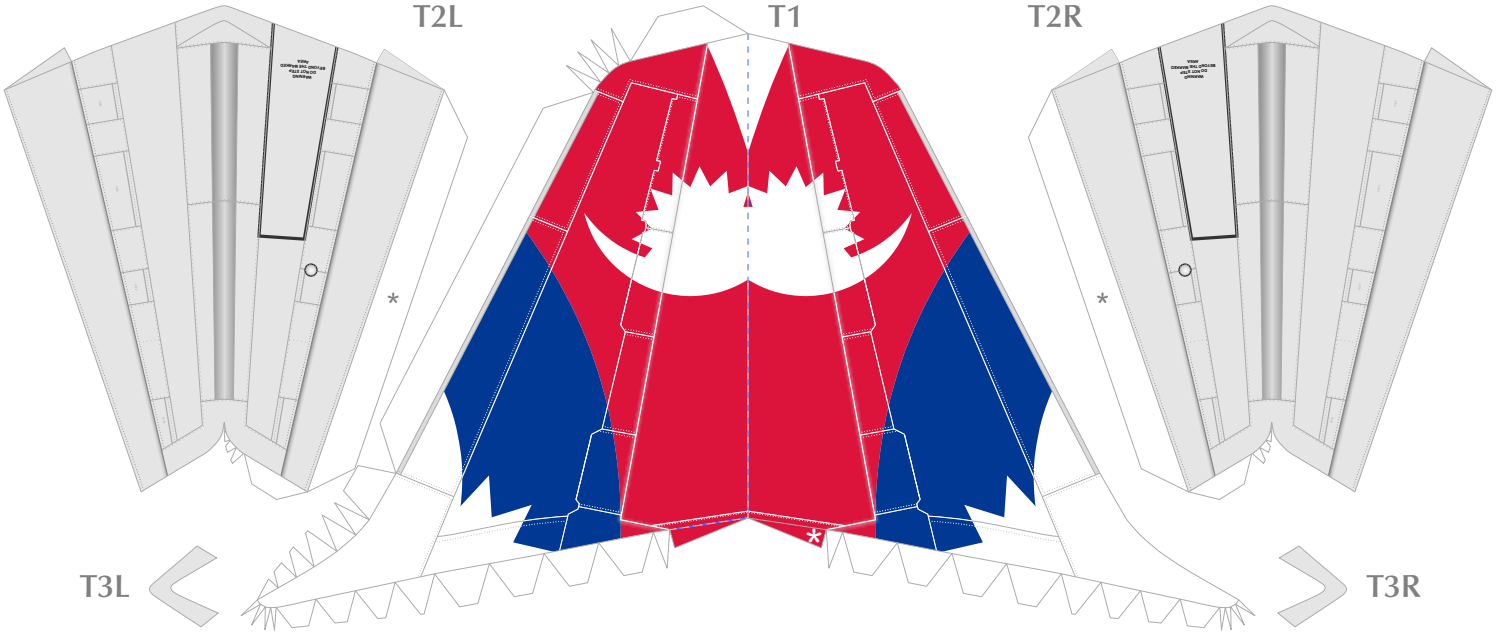

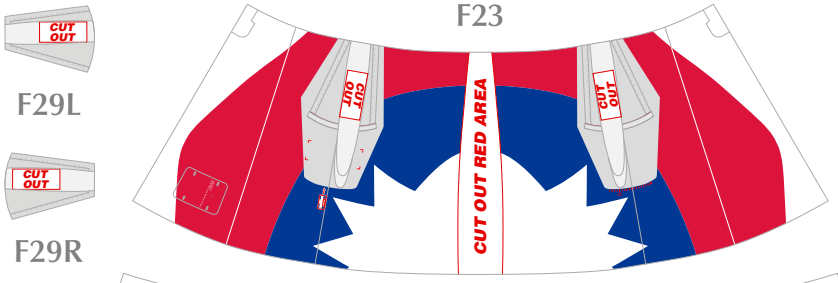



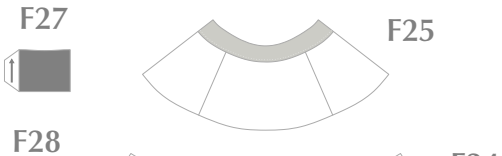

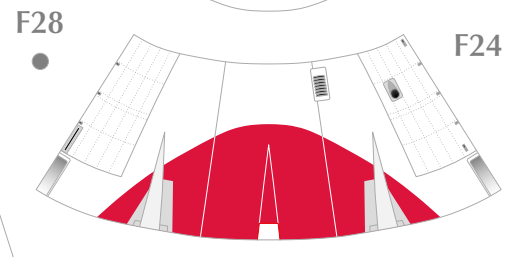

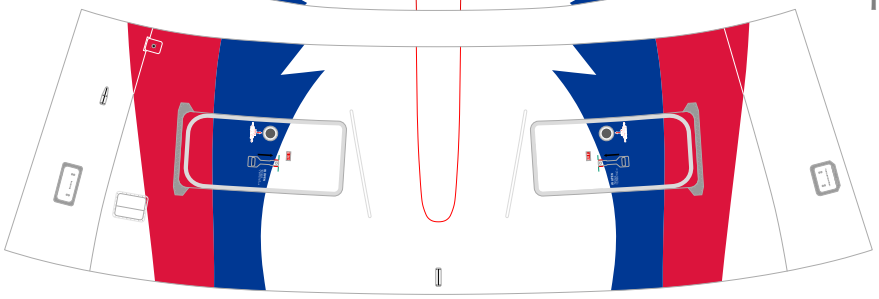

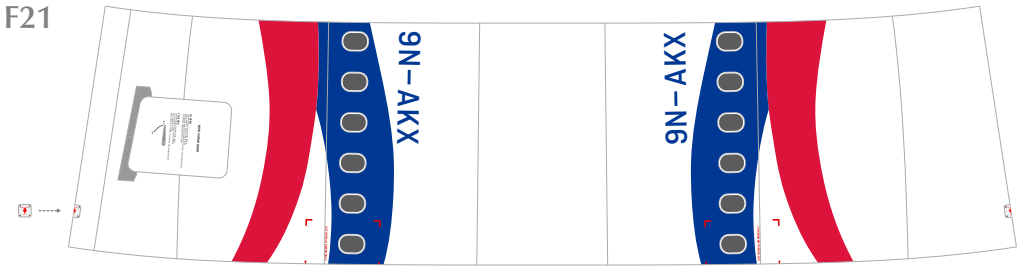



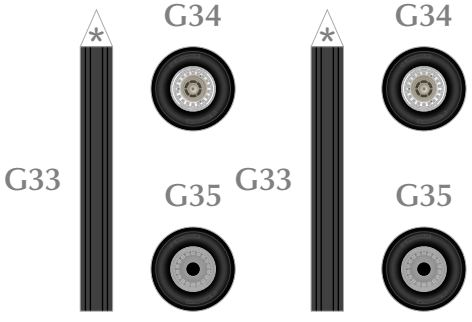

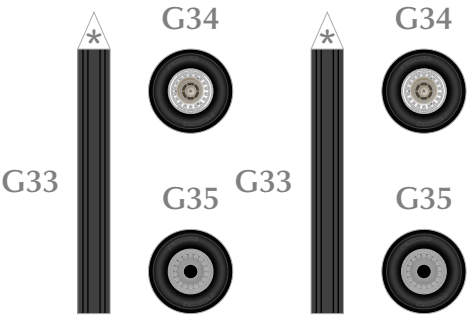

AIRBUS A321

© 2024 CityCraft

Scale 1:100

Airbus A320-233 | Nepal Airlines 9N-AKX

CITYCRAFT™ PAPERMODELS

Aunthentic Repaint

Engines: IAE V2500

By Mario Solorzano

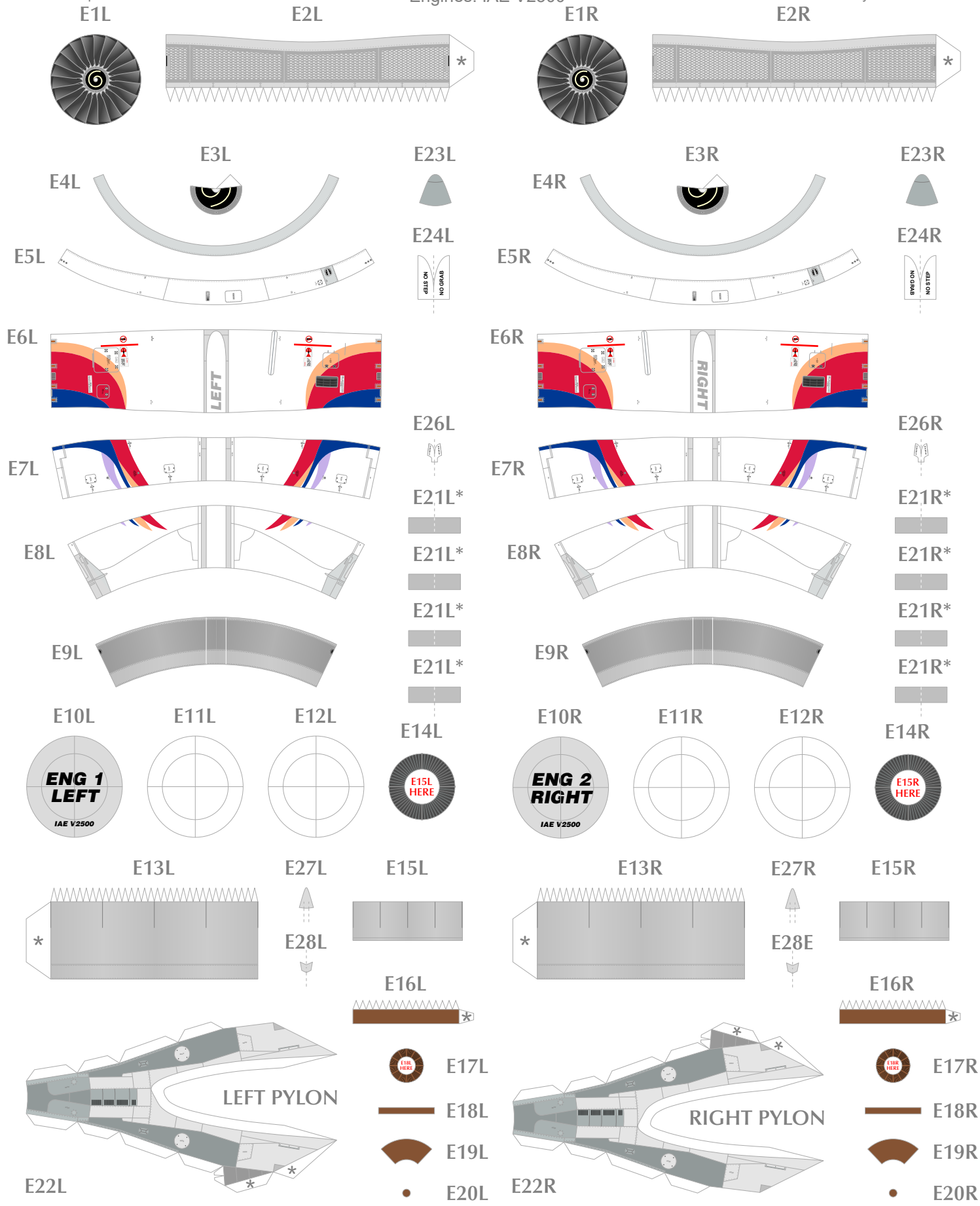

© 2024 CityCraft

Scale 1:100

Airbus A320-233 | Nepal Airlines 9N-AKX

CITYCRAFT™ PAPERMODELS

Aunthentic Repaint

By Mario Solorzano

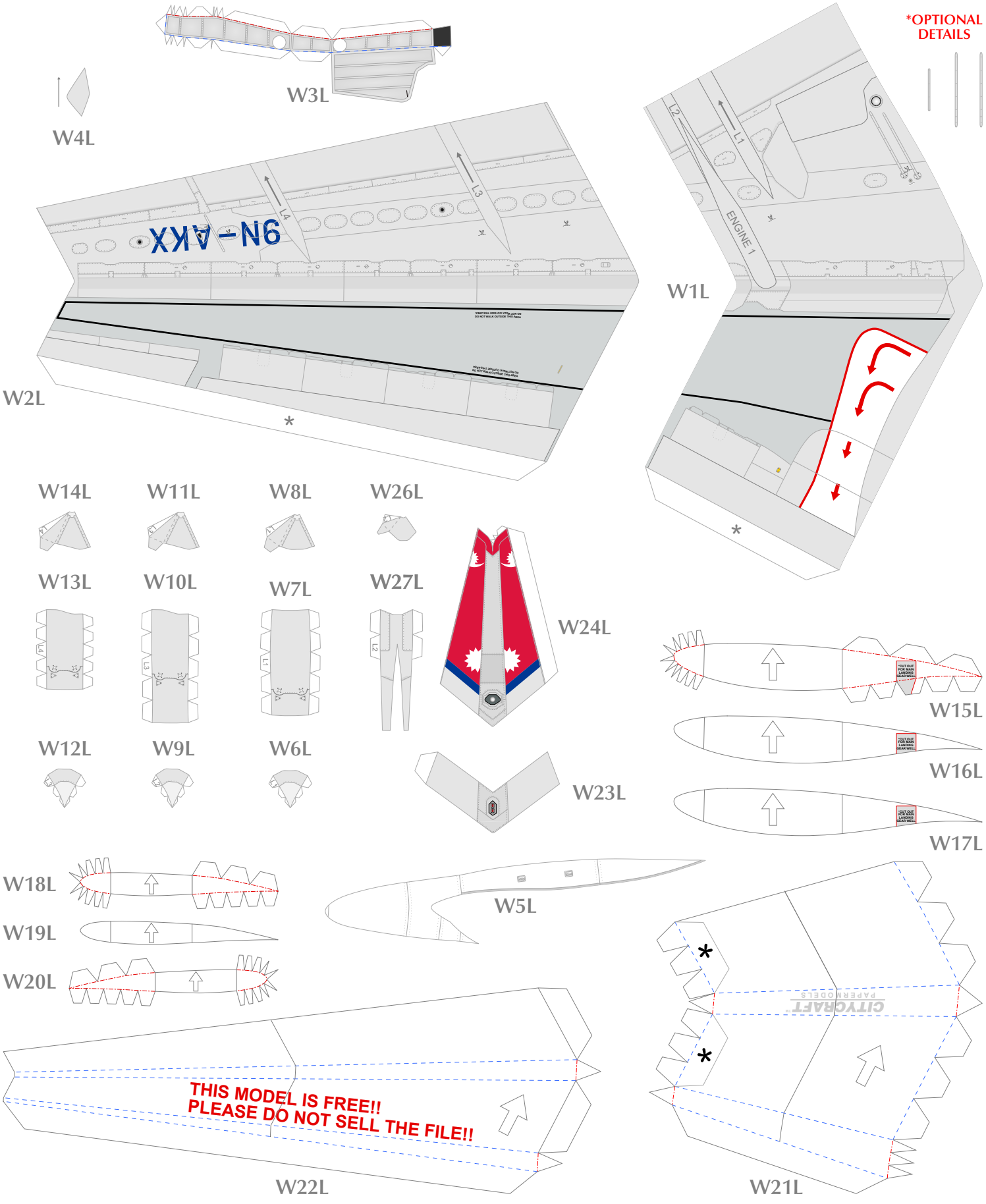

© 2024 CityCraft

Scale 1:100

06/12

Airbus A320-233 | Nepal Airlines 9N-AKX

CITYCRAFT PAPERMODELS

Aunthentic Repaint

By Mario Solorzano

*OPTIONAL DETAILS

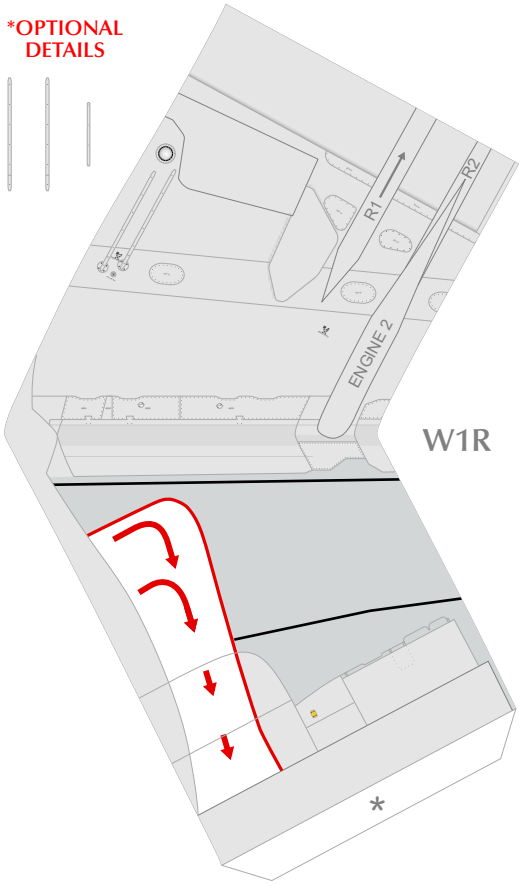

W1R

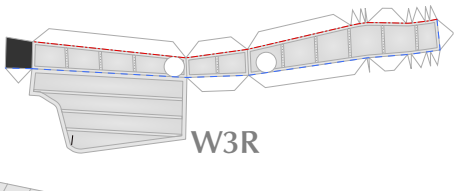

W3R



W4R

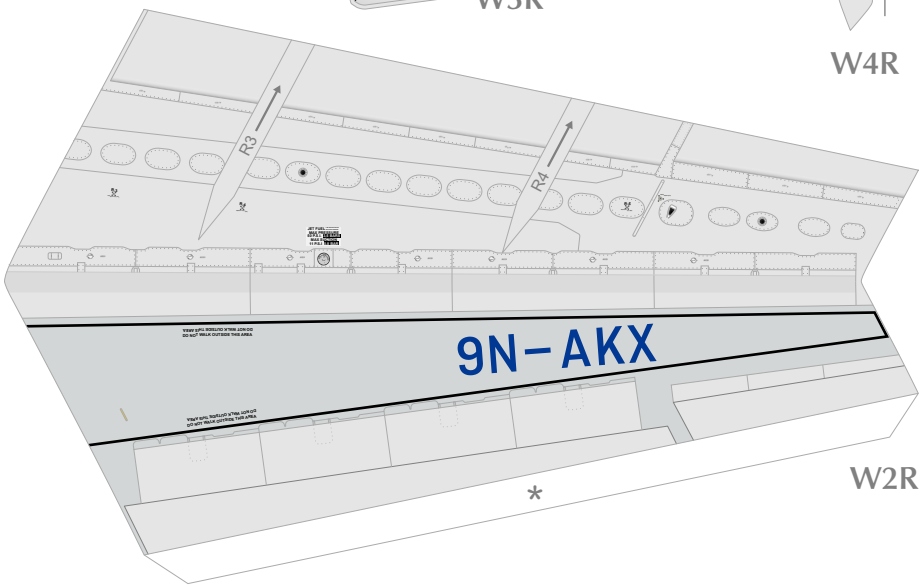

W2R

W26R W8R W11R W14R

W27R W7R W10R W13L

W6R W9R W12R

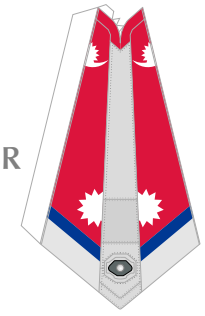

W24R

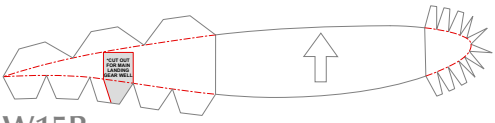

W15R

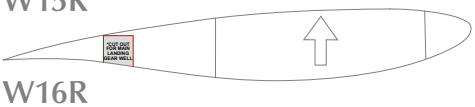

W16R

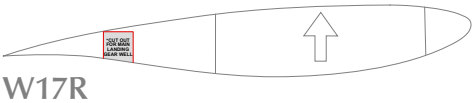

W17R

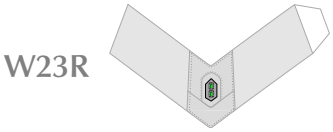

W23R



W5R

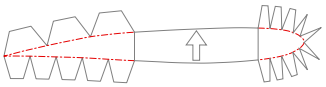

W18R



W19R

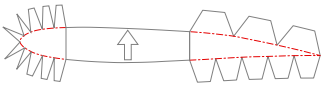

W20R

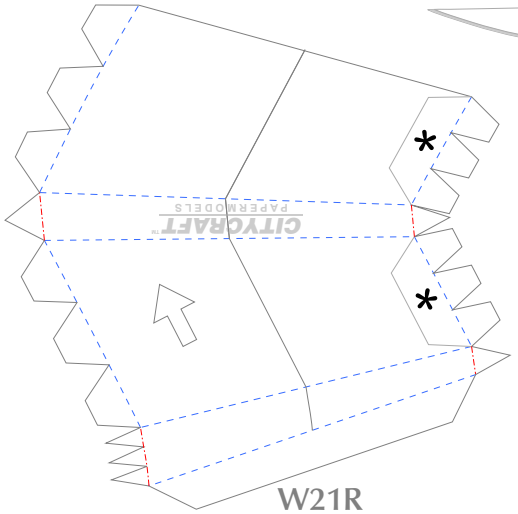

W21R

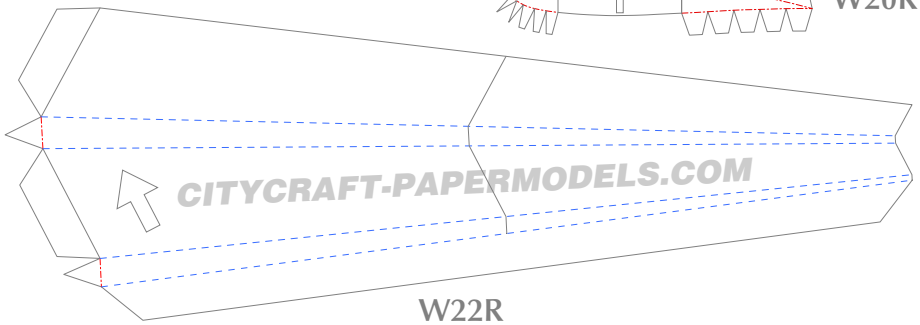

W22R

© 2024 CityCraft

Scale 1:100

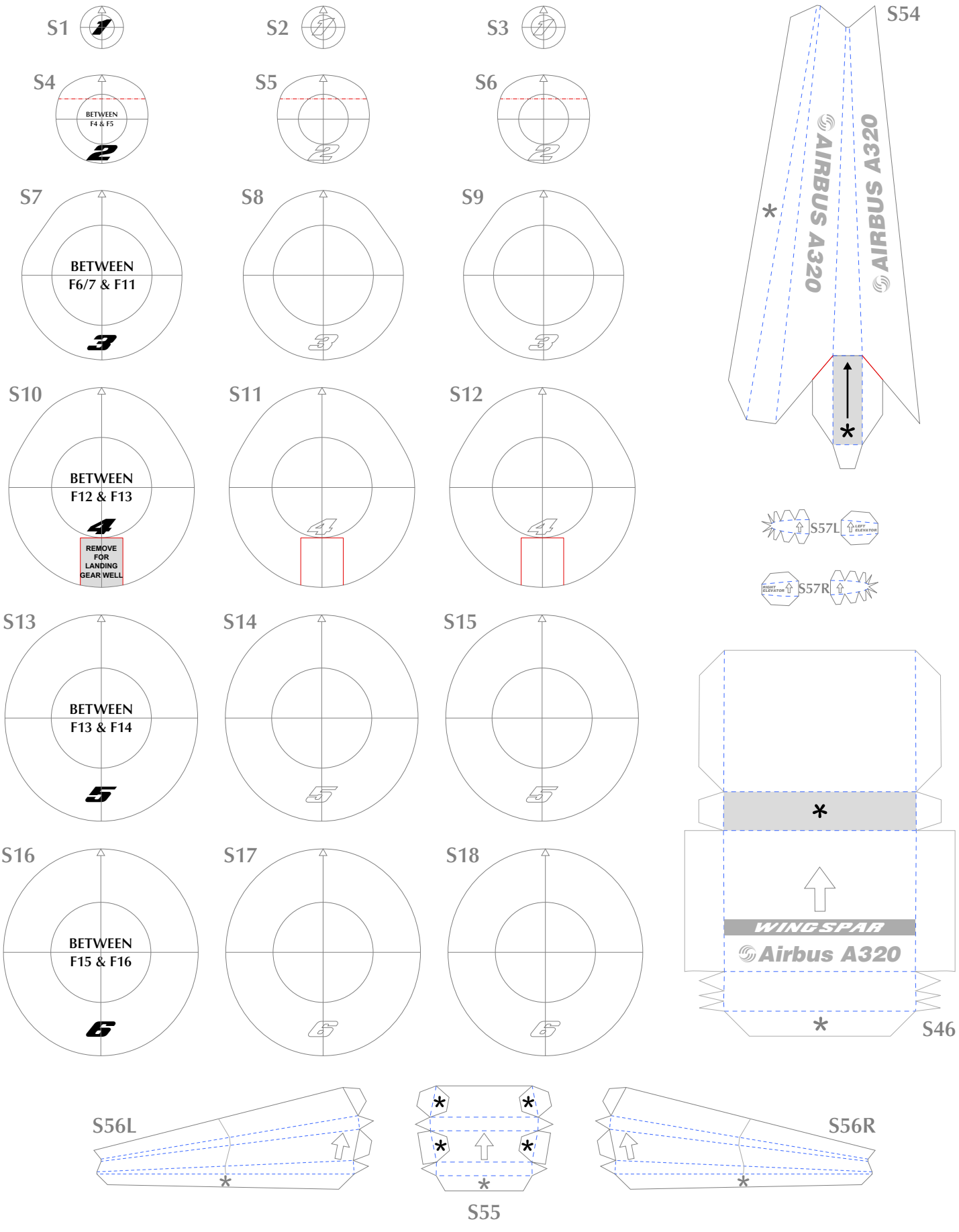
S1
S2
S3
S4
BETWEEN F4 & F5
S5
S6
S7
BETWEEN F6/7 & F11
S8
S9
S10
BETWEEN F12 & F13
REMOVE FOR LANDING GEAR WELL
S11
S12
S13
BETWEEN F13 & F14
S14
S15
S16
BETWEEN F15 & F16
S17
S18
S54
AIRBUS A320
AIRBUS A320
S57L
S57R
WINGSPAR
Airbus A320
S46
S56L
S56R
S55

S19

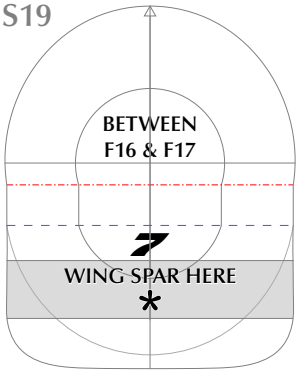

S20

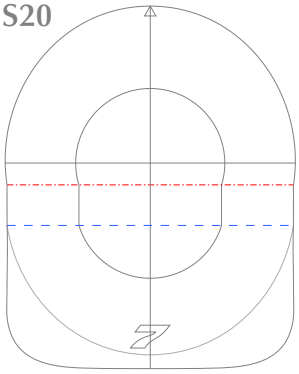

S21

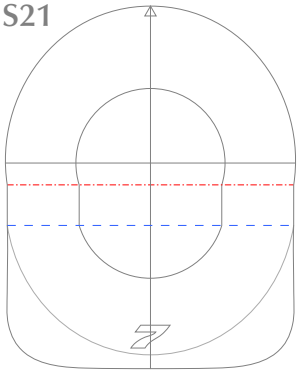

S37

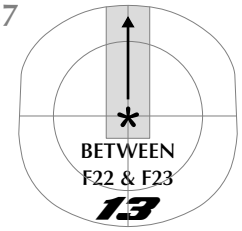

S40



S38

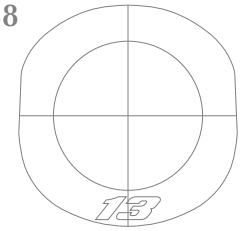

S41

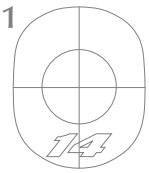

S22

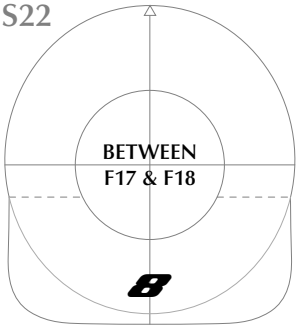

S23

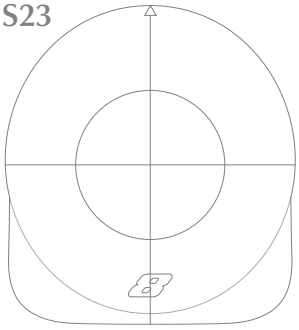

S24

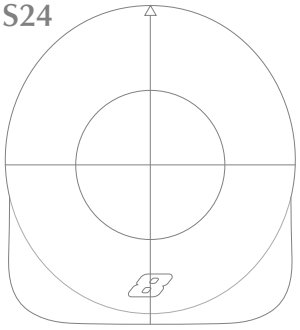

S39

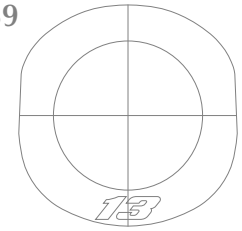

S42



S25

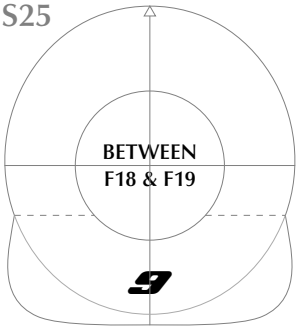

S26

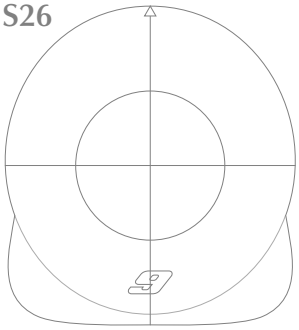

S27

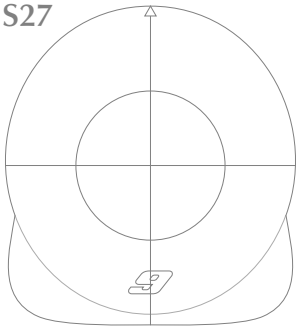

S43



S34

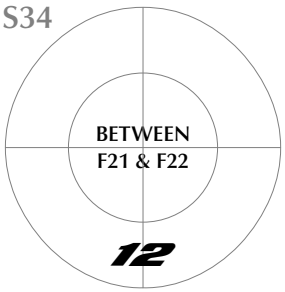

S44



S28

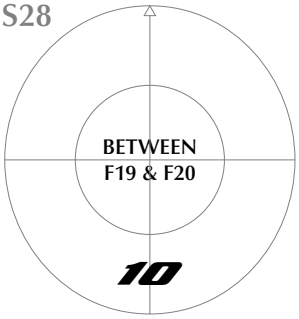

S29

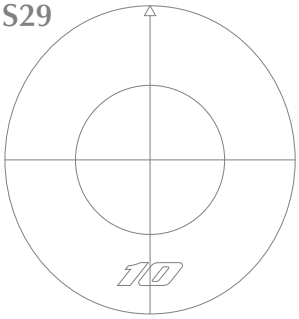

S30

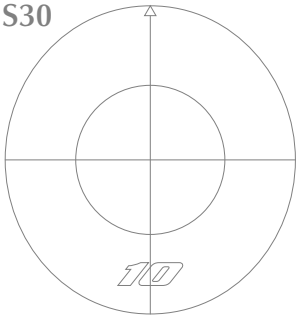

S35

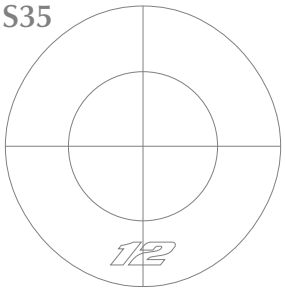

S45



S31

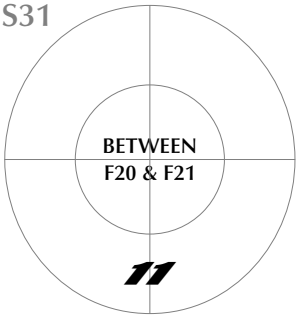

S32

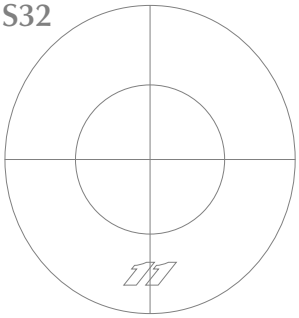

S33

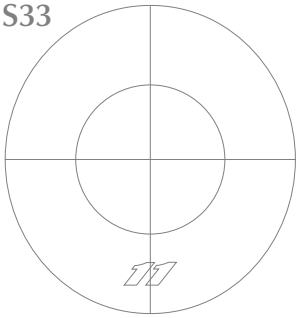

S36



© 2024 CityCraft

B1



B2

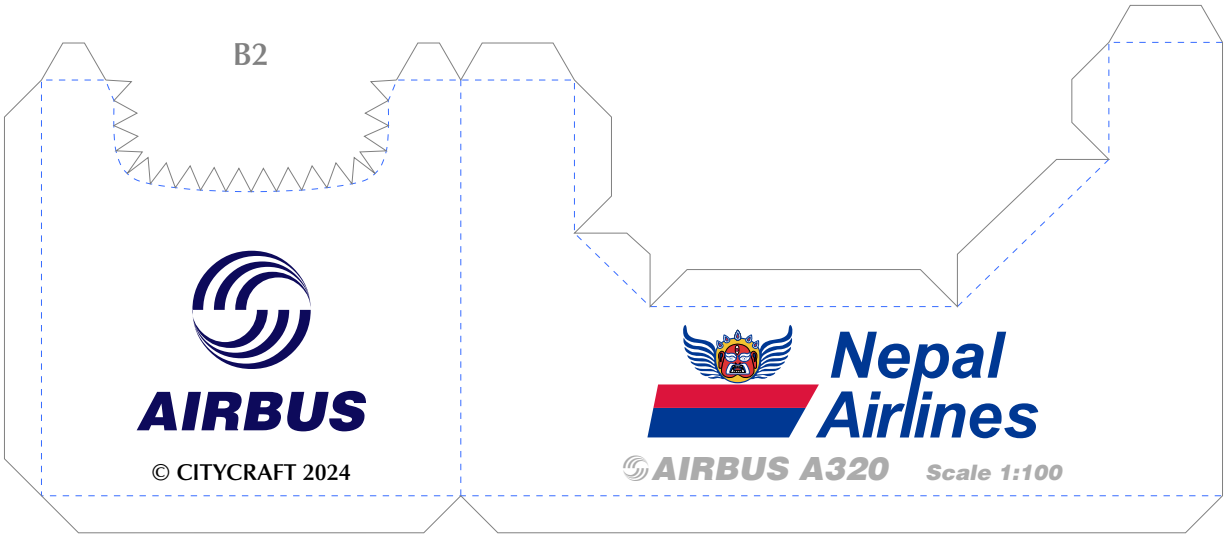

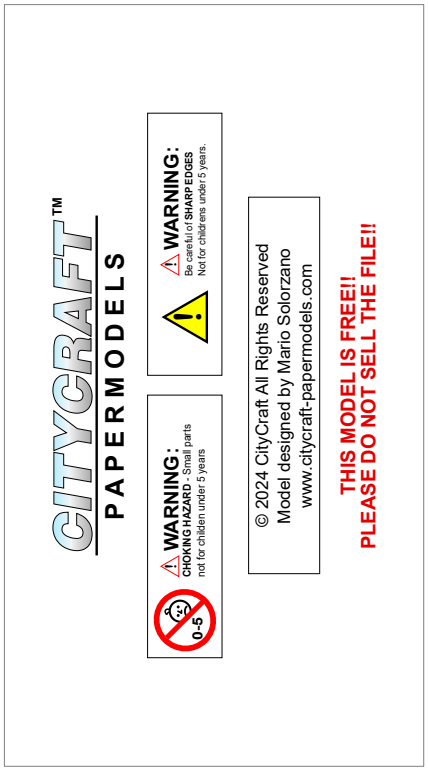

B6

B3



B4



B5

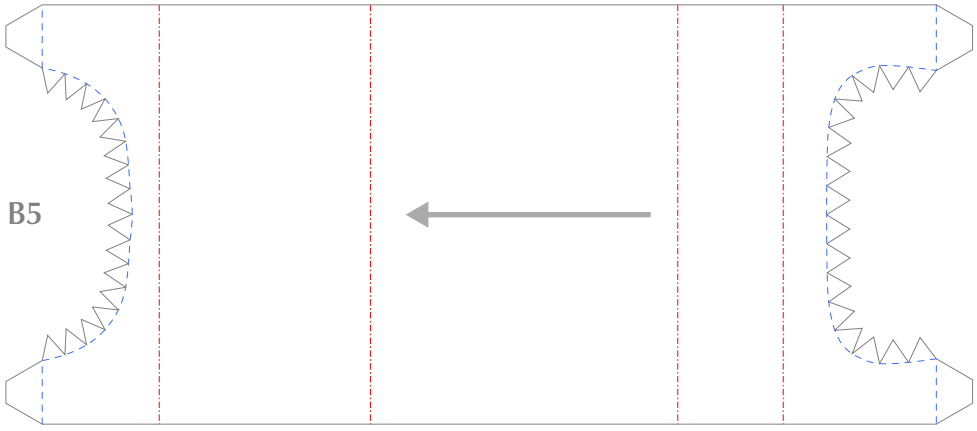

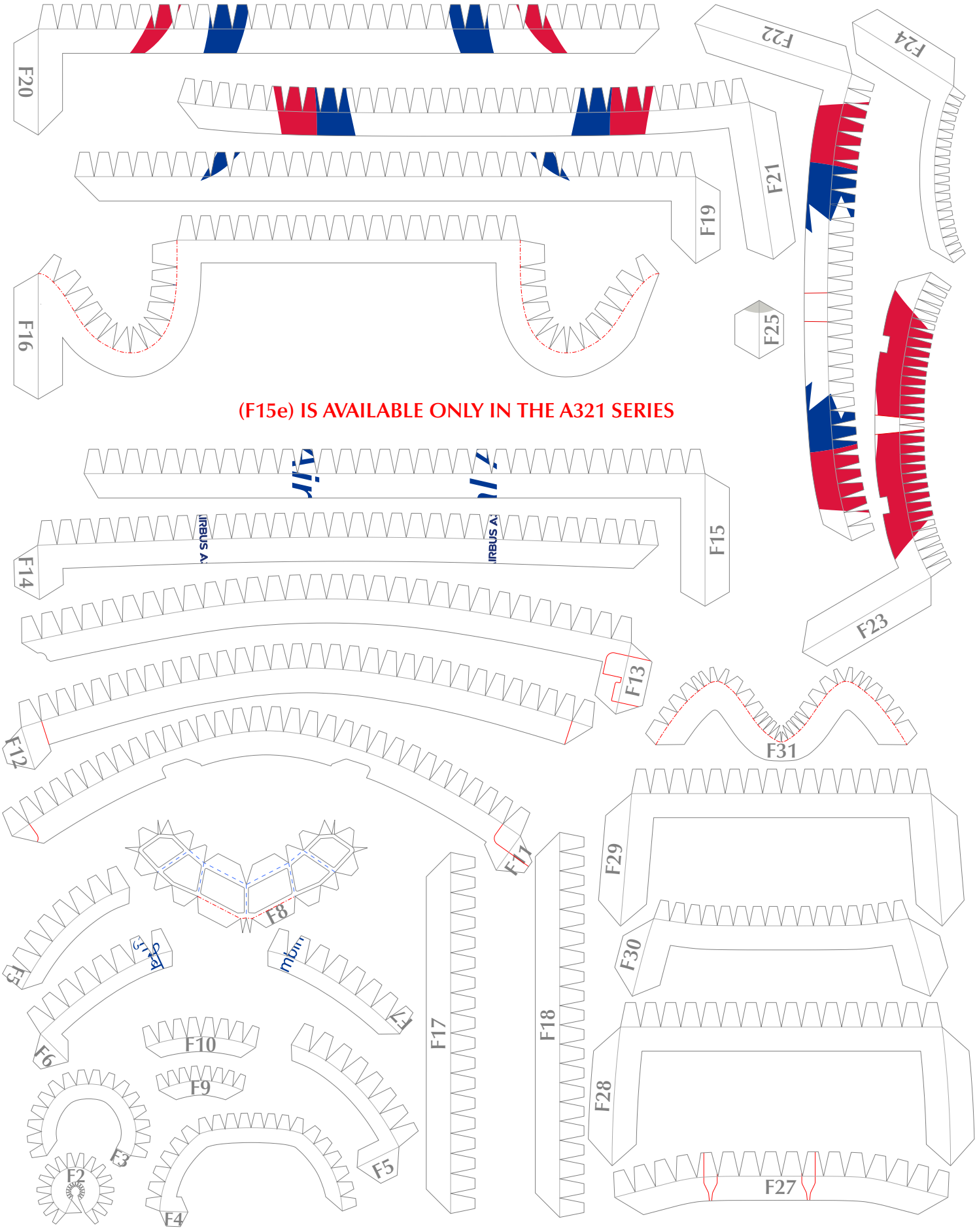

© 2024 CityCraft

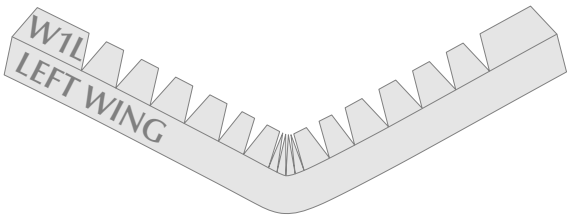

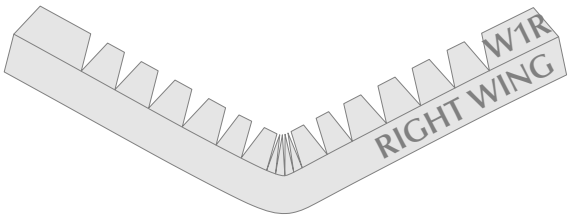

ONLY FOR IAE V2500 ENGINE

